UNIVERSITY OF CAMBRIDGE INTERNATIONAL EXAMINATIONS
General Certificate of Education
Advanced Subsidiary Level and Advanced Level

CANDIDATE NAME	
CENTRE NUMBER	
CANDIDATE NUMBER	

1321696917

PHYSICS **9702/33**

Advanced Practical Skills 1 **May/June 2011**

2 hours

Candidates answer on the Question Paper.

Additional Materials: As listed in the Confidential Instructions.

READ THESE INSTRUCTIONS FIRST

Write your Centre number, candidate number and name on all the work you hand in.
Write in dark blue or black pen.
You may use a soft pencil for any diagrams, graphs or rough working.
Do not use staples, paper clips, highlighters, glue or correction fluid.
DO **NOT** WRITE IN ANY BARCODES.

Answer **both** questions.
You will be allowed to work with the apparatus for a maximum of one hour for each question.
You are expected to record all your observations as soon as these observations are made, and to plan the presentation of the records so that it is not necessary to make a fair copy of them.
You may lose marks if you do not show your working or if you do not use appropriate units.

Additional answer paper and graph paper should be used only if it becomes necessary to do so.
You are reminded of the need for good English and clear presentation in your answers.

At the end of the examination, fasten all your work securely together.
The number of marks is given in brackets [ ] at the end of each question or part question.

For Examiner's Use	
1	
2	
Total	

This document consists of **11** printed pages and **1** blank page.

© UCLES 2011

BLANK PAGE

© UCLES 2011

You may not need to use all of the materials provided.

For Examiner's Use

1 In this experiment you will investigate how the motion of a paper strip depends on its width.

(a) (i) Measure and record the width x of the thin paper strip, as shown in Fig. 1.1.

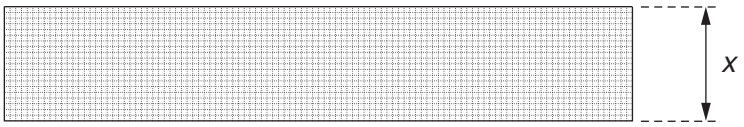

Fig. 1.1

x = ... cm [1]

(ii) Connect the clips to the strip, as shown in Fig. 1.2.

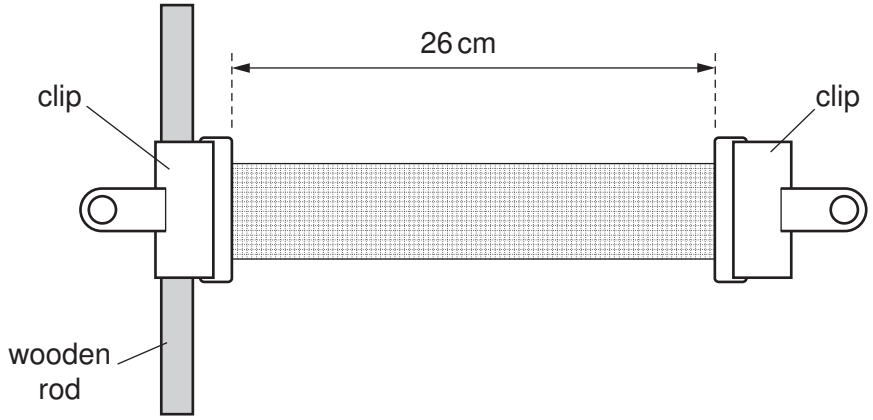

Fig. 1.2

(b) (i) Set up the apparatus with the top clip supported on the nail, as shown in Fig. 1.3.

For Examiner's Use

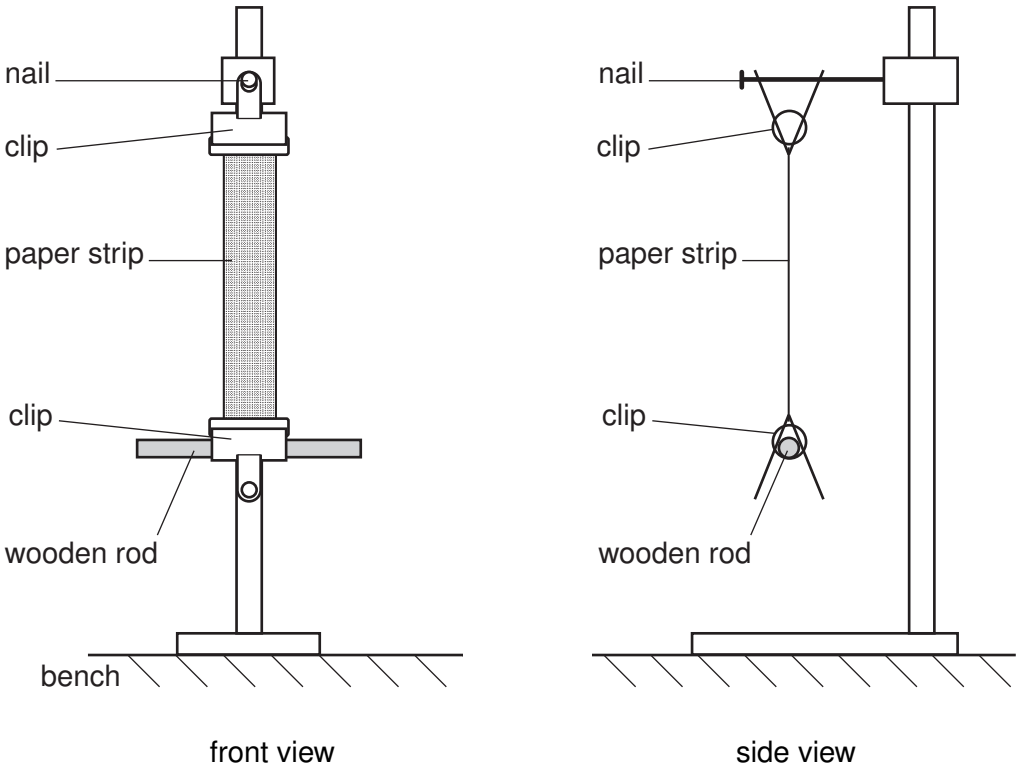

Fig. 1.3

(ii) Twist the wooden rod through an angle of approximately 45° in a horizontal plane, as shown in Fig. 1.4.

For Examiner's Use

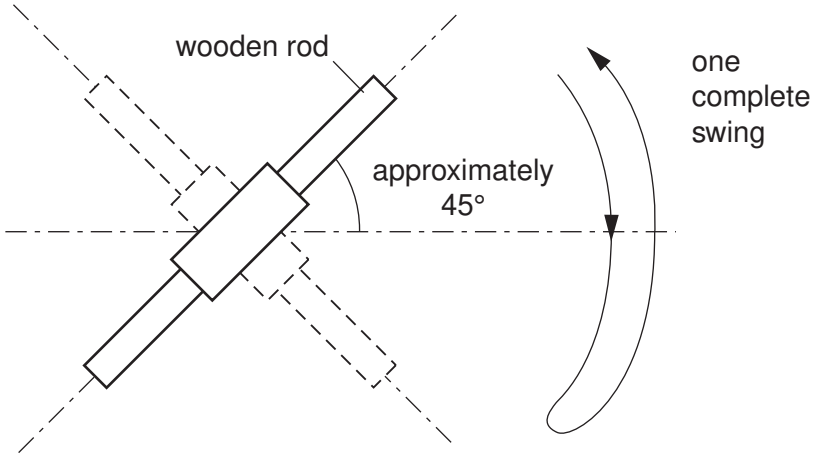

Fig. 1.4

Release the rod and watch its movement.
The wooden rod completes one swing by twisting one way and then back the other way, as shown in Fig. 1.4.
The time taken for each complete swing is *T*.
By timing several of these complete swings, determine an accurate value for *T*.

T = ... [2]

(c) By cutting new strips from the graph paper, repeat **(a)** and **(b)** until you have six sets of values of x and T. Values of x should be in the range $1\,\text{cm} \leq x \leq 6\,\text{cm}$.

Include values of $\frac{1}{x}$ in your table of results.

For Examiner's Use

[9]

(d) **(i)** Plot a graph of T on the y-axis against $\frac{1}{x}$ on the x-axis. [3]

(ii) Draw the straight line of best fit. [1]

(iii) Determine the gradient and y-intercept of this line.

gradient = ...

y-intercept = ...

[2]

© UCLES 2011

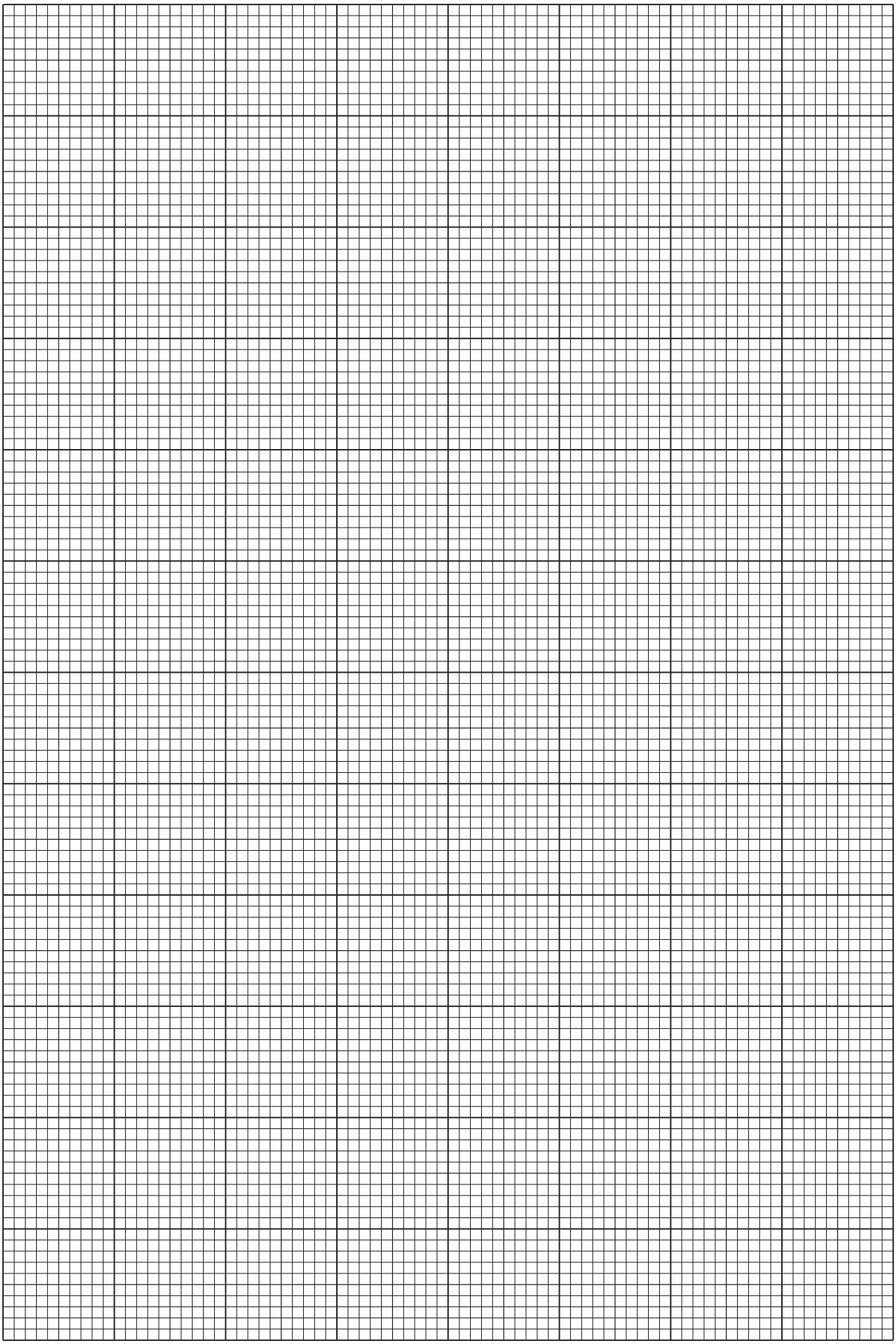

For Examiner's Use

(e) It is suggested that the relationship between T and x is

$$T = \frac{a}{x} + b$$

where a and b are constants.

Using your answers from **(d)(iii)**, determine the values of a and b.
Give appropriate units.

For Examiner's Use

$a =$ .....

$b =$ .....
[1]

(f) State one problem with determining an experimental value of T for $x = 15\,\text{cm}$.

.....

.....

.....

.....

..... [1]

You may not need to use all of the materials provided.

For Examiner's Use

2 In this experiment you will investigate the deflection of a metre rule when a mass is suspended from its centre.

(a) (i) Set up the apparatus as shown in Fig. 2.1 with a distance l between the supports of approximately 95 cm.

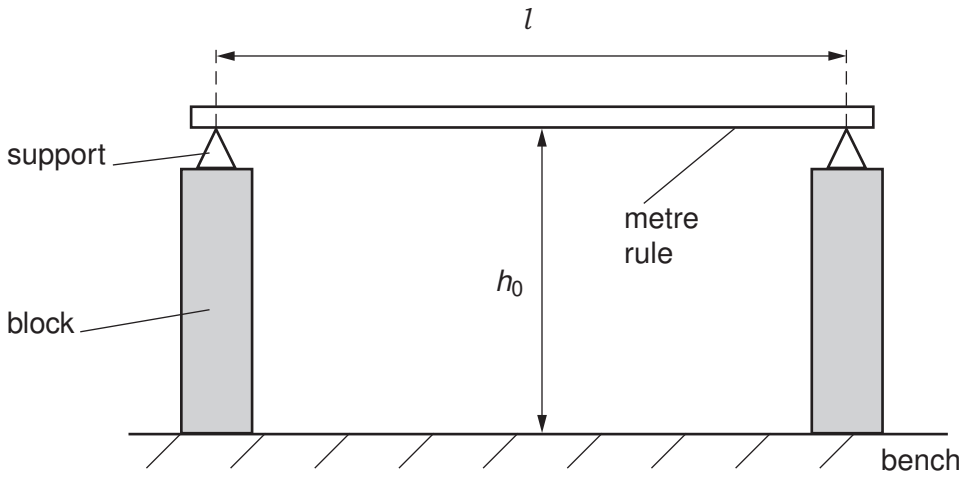

Fig. 2.1

(ii) Measure and record l.

l = ... [1]

(iii) Midway between the supports, measure and record the height h_0 of the bottom of the rule above the bench.

h_0 = ... [1]

(b) (i) Use the small loop of string to suspend the mass from the rule, midway between the supports.

(ii) Midway between the supports, measure and record the new height h of the bottom of the rule above the bench.

h = ... [1]

© UCLES 2011

(iii) Calculate the deflection d of the beam where $d = h_0 - h$.

For Examiner's Use

$d =$ ..... [1]

(c) Estimate the percentage uncertainty in your value of d.

percentage uncertainty = ... [1]

(d) Change l to approximately 60 cm. Repeat **(a)(ii)**, **(a)(iii)** and **(b)**.

$l =$ .....

$h_0 =$ .....

$h =$ .....

$d =$ .....

[4]

(e) It is suggested that the quantities d and l are related by the equation

$$d = k\,l^3$$

where k is a constant.

For Examiner's Use

(i) Using your data, calculate two values of k.

first value of k = ...

second value of k = ...

[1]

(ii) Explain whether your results support the suggested relationship.

.....

.....

.....

..... [1]

(iii) Justify the number of significant figures that you have given for your values of k.

.....

.....

..... [1]

(f) **(i)** Describe four sources of uncertainty or limitations of the procedure for this experiment.

For Examiner's Use

1. .....

.....

2. .....

.....

3. .....

.....

4. .....

.....

[4]

(ii) Describe four improvements that could be made to this experiment. You may suggest the use of other apparatus or different procedures.

1. .....

.....

2. .....

.....

3. .....

.....

4. .....

.....

[4]

Permission to reproduce items where third-party owned material protected by copyright is included has been sought and cleared where possible. Every reasonable effort has been made by the publisher (UCLES) to trace copyright holders, but if any items requiring clearance have unwittingly been included, the publisher will be pleased to make amends at the earliest possible opportunity.

University of Cambridge International Examinations is part of the Cambridge Assessment Group. Cambridge Assessment is the brand name of University of Cambridge Local Examinations Syndicate (UCLES), which is itself a department of the University of Cambridge.